DINSTAR

Quick Start Guide

G280 Series IP Phone

THANKS FOR CHOOSING DINSTAR'S IP PHONE!

Please read this guide carefully before installing the phone. If you need any technical support, please contact us.

+86 755 61919966 www.dinstar.cn support@dinstar.com

Packaging Contents

The following items are included in your package. If you find anything missing, please contact our supporting and customer center.

- **G280 Series IP Phone**

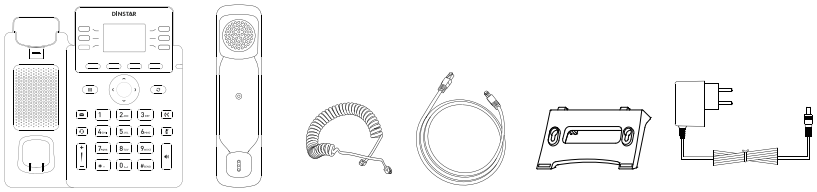

Note: G280 Series IP Phone include G280/G280P. The G280P IP Phone is powered by PoE, the power adapter will not be provided by default.

Hardware Component Instructions

The main hardware components of the G280 series IP Phone are the LCD screen and the keypad.

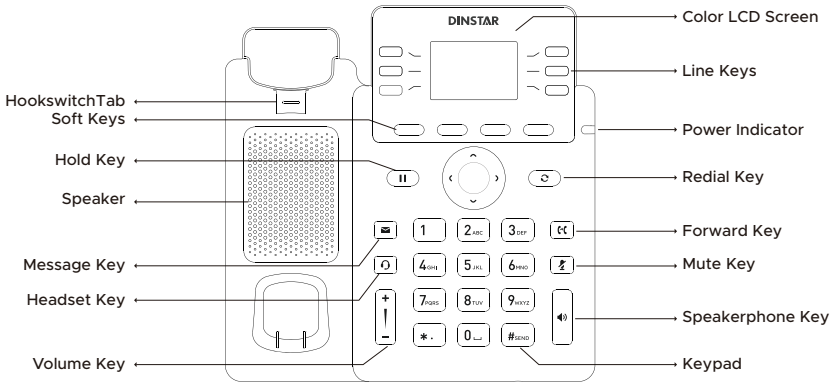

Color LCD Screen	Displays the call, default account, message, soft key, time, date and other related information.
Power Indicator	Indicates the power connection status and other characteristic status of the telephone: ● When receiving a call, the indicator light flashes quickly; ● When there are missed calls or received voice messages / short messages, the indicator light flashes slowly.
Line Keys	It is used to activate SIP accounts and configure various functions.
Soft Keys	The LCD interface of the phone displays the function names corresponding to the four soft keys, and the user can press the corresponding soft keys to complete the operation.
Hookswitch with Hall sensor	● Lift the handset from the cradle to take the line off-hook. ● Replace the handset to the cradle to take the line on-hook.
Keypad	Provides input for numbers, uppercase and lowercase letters, and other special characters.

Assembling the IP Phone

Attach the stand to the IP Phone, as shown below:

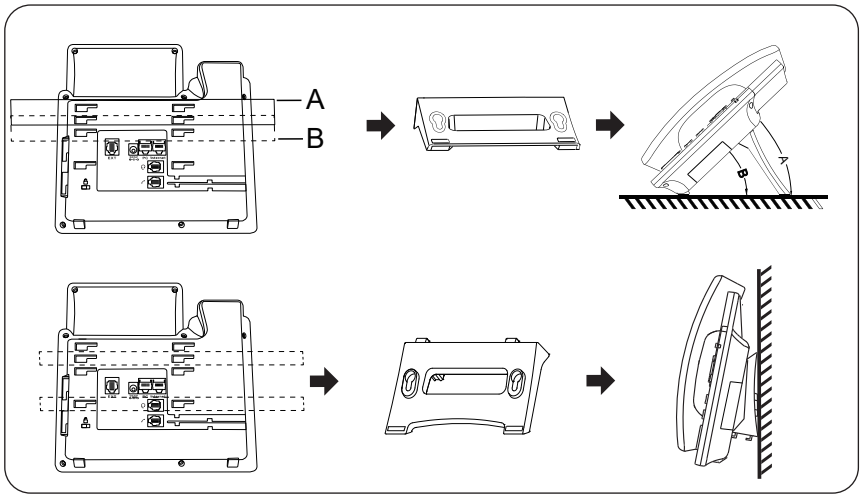

Connect the handset, headset, network and power supply as shown in the figure below:

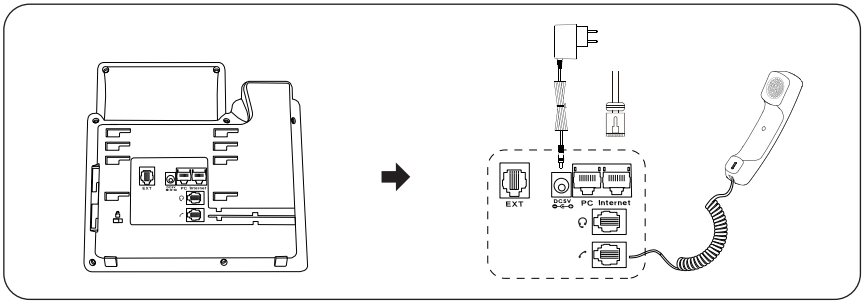

The Internet port of G280P supports Power over Ethernet (PoE), compliant with the IEEE 802.3af standard only.

Note: PC, headset and Expansion Module connection are optional.

Startup

After the IP Phone is powered on and connected to network, it will start up automatically. And then the IP Phone is ready for use. You can configure the IP Phone via the phone's user interface or the web user interface.

Configure the IP Phone

There are two ways to configure the IP Phone:

- Configure via the user interface on the IP Phone
- Configure via the web interface on your PC

Configure via the user interface on the IP Phone

The LCD screen and the keypad on the IP phone allows you to execute all call operation tasks and basic configuration changes directly on the phone.

Network Setting

By default, the phone attempts to contact a DHCP server in your network to obtain its valid network settings, e.g., IP address, subnet mask and gateway address.
If your phone cannot contact a DHCP server, you need to configure network settings manually.

- Press the **Menu** soft key when the phone is idle, select **Settings → Advanced Setting**, input the default password 'admin@123#', and then select **Network → LAN Port → IPv4, press Enter soft key.**
- Select **IPv4 Static** or **PPPoE**. If you select IPv4 Static, you need to enter the IP address, subnet mask and gateway address. If you select PPPoE, you need to enter the username and password of the PPPoE account. The IPv6 configuration is similar to the above operations.
- Press the **Save** soft key to accept the change. Then the network settings is completed.

Account Setting:

(1) Press the **Menu** soft key when the phone is idle, and then select Settings → Advanced Setting, input the default password 'admin@123#', and then select Account, press **Enter** soft key.

(2) Select an account to configure account information. The following is the explanation of of relevant parameters:

- Active: Press ‹ or › to select Enable/Disable to enable or disable the account
- Label: It is shown on the LCD screen to identify the account.
- Display Name: It is shown as caller ID when you place a call.
- Register Name: It is an authenticated ID for authentication provided by ITSP (required).
- User Name: It is provided by ITSP for registration (required).
- Password: It is provided by ITSP for registration (required).
- SIP Server: It is provided by ITSP for registration (required).
- SIP Port: It is provided by ITSP for registration (required).

For more information about account parameters, please refer to the user manual of the IP Phone.

Configure via the Web interface on your PC

Accessing the web interface on PC

- Click **Menu → Status** when the phone is idle to obtain the IP address of the phone.
- Open a web browser on your PC, enter the IP address into the address bar(e.g., https://192.168.11.110'), and then press Enter.
- Enter the username (default: admin) and password (default: admin@123#) in to the login page and then click Login.

Network Setting

Click Network → Basic to configure the LAN port and the PC port.

If there is a need, click Network to configure the VLAN, VPN, SNMP, TR069, LLDP, local RTP, QoS and 802.1x.

Account Setting

(1) Click Account→Basic to configure the basic information of an account. For the explanation of the account parameters, please refer to Configure via the user interface on the Phone.
(2) If there is a need, click Account to configure the codec, DTMF, call-related information and etc. for the account.

Basic call Feature

Place a call

Using the handset

(1) Pick up the handset.
(2) Enter the number and then press the **Send** soft key.

Using the speakerphone

(1) With the handset on-hook, press .
(2) Enter the number and then press the **Send** soft key.

Using the Headset

(1) With the headset connected, press to activate the headset mode.
(2) Enter the number and then press the **Send** soft key.

Note: During a call, you can alternate between the headset, hands-free speakerphone and the handset mode by pressing the corresponding key or by picking up the handset.

Answer a call

Using the handset

- Pick up the handset.

Using the speakerphone

- Press .

Using the headset

- Press .

Note: You can reject an incoming call by pressing the **Reject** soft key.

End a call

Using the handset

Hand up the handset or press the **End** soft key.

Using the speakerphone

Press or the **End** soft key.

Using the handset

Press the **End** soft key.

Redial

Press the **History** soft key to enter the dialed calls list, then press or to select the desired entry, and then press **Dial** soft key.
Press directly when the phone is idle to dial out the last dialed number.

Call Mute and Un-mute

Press to mute the microphone during a call.
Press again to un-mute the call.

Call Hold and Resume

Place a call on hold

Press or the **Hold** soft key during an active call.

To resume a call

If there is only one call on hold, press or the **Resume** soft key.
If there is more than one call on hold, press or to select the desired call, and then press or the **Resume** soft key.

Call Transfer

(1) Press the **Trans** soft key during an active call. The call is placed on hold.
(2) Enter the number you want to transfer to.
(3) Press **Trans** soft key again.

Call Forward

- Press to enter the interface for configuring call forwarding, or press the **Menu** soft key when the phone is idle and then select **Features** → **Call Forward.**
- Select the desired forward type:

Always Forward: Incoming calls are forwarded unconditionally.

Busy Forward: Incoming calls are forwarded when the phone is busy.

No Answer Forward: Incoming calls are forwarded if not answered after a period of time.

- Enter the number you want the call to be forwarded to. For No Answer Forward, set a value in the Timeout field for determining the duration of the ringing time before the call is forwarded.
- Press the **Save** soft key to accept the change.

Call Conference

(1) Press the **New** soft key to make a new call to a third party during an active call.
(2) Press the **Conf** soft key to start a three-way conference after the third party has answered the call.
(3) Press the **Conf** soft key again, enter the number, then press the Send soft key to call the fourth party.
(4) Press the **Conf** soft key again to start a four-way conference after the fourth party has answered the call.
(5) Repeat step 3 to step 4 once to start the five-way conference.
(6) When the call conference ends, press the **End** soft key to disconnect all parties.

Speed Dial

To configure a speed dial key:

(1) Press the **Menu** soft key when the phone is idle, and then select **Features → Programmable Keys → Line Keys.**
(2) Select the desired line key, and then press the **Enter** soft key.
(3) Press the **Switch** soft key to select **Speed Dial** from the **Type** field, and then enter the number for speed dial in the **Value** field.
(4) Press the **Save** soft key to accept the change.

To use the speed dial key:

Press the speed dial key to dial out the preset number.

Hotline

To configure a hotline number:

(1) Press the **Menu** soft key when the phone is idle, select Settings → Advanced Setting, input the default password 'admin@123#', and then select Account.
(2) Press the **Switch** soft key to select Enable for the Hotline Active field, and then enter the desired hotline number in the Hotline Number field.
(3) Enter the hotline delay time in the Timeout field. The valid values range from 0 to 5 and default value is 4.
(4) Press the **Save** soft key to accept the change.

To use the hotline:

Pick up the handset or press , and the call to the preset hotline will be dialed out automatically.

Voice Message

Message Waiting Indicator(MWI) on the idle LCD screen indicates one or more voice messages are waiting at the message center. The power indicator slowly flashes red.

To listen to voice message:

(1) Press or the **Menu** soft key, navigate to **Messages** → **Voice Messages**→ **Voice Messages** View, select an account, then press the **Conn** soft key.
(2) Follow the voice prompts to listen to your voice message.

DND

To enable DND:

Press the **DND** soft key when the phone is idle, or press the **Menu** soft key and then select Features → **DND** to enable **DND** and complete relevant configurations.

Customize the IP Phone

Call History

(1) Press the **History** soft key when the phone is idle, press or to scroll through the call list.
(2) Select an entry from the list, and you can do the following:

- Press the **Dial** soft key to place a call to this entry;
- Press the **Delete** soft key to delete the entry from the list.
- If you press the **Option** soft key, you can also do the following:
- Select Detail to view detailed information about the entry;
- Select Add to Contacts to add the entry to the local phonebook;
- Select Add to Blacklist to add the entry to the blacklist;
- Select Add to Whitelist to add the entry to the whitelist;
- Select Delete All to delete all entries from the history call list.

Phonebook

To add a contact to the local phonebook:

(1) Press the **Menu** soft key When the phone is idle, and then select Book → Local Phone book All Contacts.
(2) Press the **Add** soft key to add a contact to the phonebook.
(3) Enter the contact's information in corresponding fields and press the **Save** soft key.

To delete a contact:

(1) Press the **Menu** soft key when the phone is idle, and then select **Book→Local Phone book → All Contacts.**
(2) Press or to select the desired contact, press the **Option** soft key and then select Delete from the prompt list.
(3) Press the **OK** soft key when the LCD screen displays 'Delete selected item?'.

Volume Adjustment

Press during a call to adjust receiver volume of the handset/speakphone/headset, Press the same key when the phone is idle or ringing to adjust the ring volume. You can also press the **Menu** soft key and select **Settings → Basic Setting → Volume Setting** to adjust the talk volume, tone volume, ring volume, Mic (handset/headset/handfree) volume as well as key volume.

Ring tones

(1) Press the **Menu** soft key when the phone is idle, and then select **Settings→Basic Setting→ Ring Tones.**
(2) Press or to select the desired ring tone, and then press the **Save** soft key.

Trouble Shooting

Cannot obtain IP via DHCP

A. Check the physical port connection between the phone and the switch: ensure the phone is connected to the Internet port; if it's connected to a PC port, move it to the Internet port.
B. Check the phone's network acquisition method on the device: go to Menu Settings → Advanced Settings (password:admin@123#) → Network → LAN Port and verify that the IP acquisition method is set to "Dynamic (DHCP)".

Cannot access the web interface

A. Check the connection between the device's PC port and the computer's network port to ensure the network connection is functioning.
B. Click **Menu → Status** on the phone to view and confirm the phone's IP address; verify you entered the correct IP address in the browser.
C. On the phone go to **Menu → Settings → Advanced Settings → Network→Web-Server**, and confirm that "Web Type" is not set to "Disabled".
D. If you are inside a LAN, make sure the phone's IP does not conflict with other devices on the network.

SIP account registration failed

A. Log in to the web management interface in a browser, navigate to **Account Basic**, and check that the SIP server IP and port for the account match the registration server. Also verify the SIP account's registration name and password match the credentials provided by the server.

B. Check network connectivity between the IP phone and the server. In the web management interface, go to **Network → Diagnostics** and use Ping to test the SIP server IP address to confirm connectivity between the phone and the SIP server.

Calls fail / cannot be connected

A. On the phone, check the account registration status via the number display: green indicates registered, red indicates not registered. Or log in to the web management interface and go to **Account → Basic** to see whether the corresponding SIP account is unregistered or has dropped offline.

B. In the web management interface, go to **Network → Diagnostics** and use Ping to test network stability; ensure there is no abnormal packet loss.

C. Check whether the SIP server has applied number translations, routing rules, or other service configurations or restrictions.

D. Confirm the destination number exists, is registered, and is not set to Do Not Disturb.

Restore to factory settings

A. On the phone, go to **Menu → Settings → Advanced Settings → Restore to Factory**, then press **OK** soft key when the LCD screen displays 'reset to Factory?' to confirm the factory reset.

B. In the web management interface, go to **Maintenance/Upgrade → Upgrade,** locate "Restore to Factory setting" and click "Submit".

C. With the phone powered off, press and hold the "*" and "#" keys simultaneously, then apply power and continue holding until the device begins restoring factory settings.

Shenzhen Dinstar Co., Ltd.

Address: Floor 18, Building 7A, Vanke Cloud City Phase 1, Xingke 1st Street,
Xili Sub-district, Nanshan District, Shenzhen.

Qualification Certificate

Model

Inspector

MAC/SN

Date

Warranty Card

Warranty Claim Form

Cusomter's Name: _____ Puchase Date: _____

Address: _____ Telephone: _____

Date of Failure	Problem Description S/N of Faulty Devices/Parts	Repaired Results	Repaired Date

To help us serve you better. Please fill out this Warrant Claim Form and ship it together with faultydevices/parts.Thanks for your cooperation.

Warranty Terms and Conditions

We provide warranty cover for this appliance subject to the following conditions:

1. For any fault that occurs during normal use within one month after product sale, customer can ask for freereturn,replacement or repair,and Dinstar pays the freight out and home.

2. For any fault that occurs during normal use within one year after product sale, customer can enjoy freemaintenance,and part of the return freight is borne by Dinstar.

3. Customer can stll enjoy maintenance services within three years after product sale, but he or she needs topay the cost of materials.

4. Customer can still enjoy maintenance services after three years since product sale, but he or she needs to paythe cost of labor and materials.

5. Please bring purchase certificate and the warranty card (effective when stamped). If these are notpresented,the free warranty period will be calculated from the date of production.

6. Customer cannot have free warranty service under the following conditions:

1) The free warranty period has expired.

2) Damages caused by human activities (including the damages due to incompliance with the requirements in user manual during installation or use).

3) Damages due to use of accessories that are not produced by Dinstar.

4) Consequences resulting from unauthorized tampering with the product.

5) Damages during transportation, loading or unloading

6) Damages caused by force majeure such as earthquake, fire disaster and lightning stroke.